Wilbert Burial Vaults



Wilbert®

Commemorating Life with Respect℠

What is a burial vault?

A burial vault is a lined and sealed outer receptacle that houses the casket. It protects the casket from the weight of the earth and heavy maintenance equipment that will pass over the grave. It also helps resist water and preserves the beauty of the cemetery or memorial park by preventing the ground from settling.

If it's not lined and sealed, it's not a burial vault.

An outer burial container, or gravebox, is an unlined concrete box with drainage holes to allow ground water to escape.

Burial vaults are constructed of high-strength concrete and reinforced with a metal or plastic liner. They provide the most lasting protection.

By definition, if an outer burial container is not lined and sealed, it's not a burial vault.

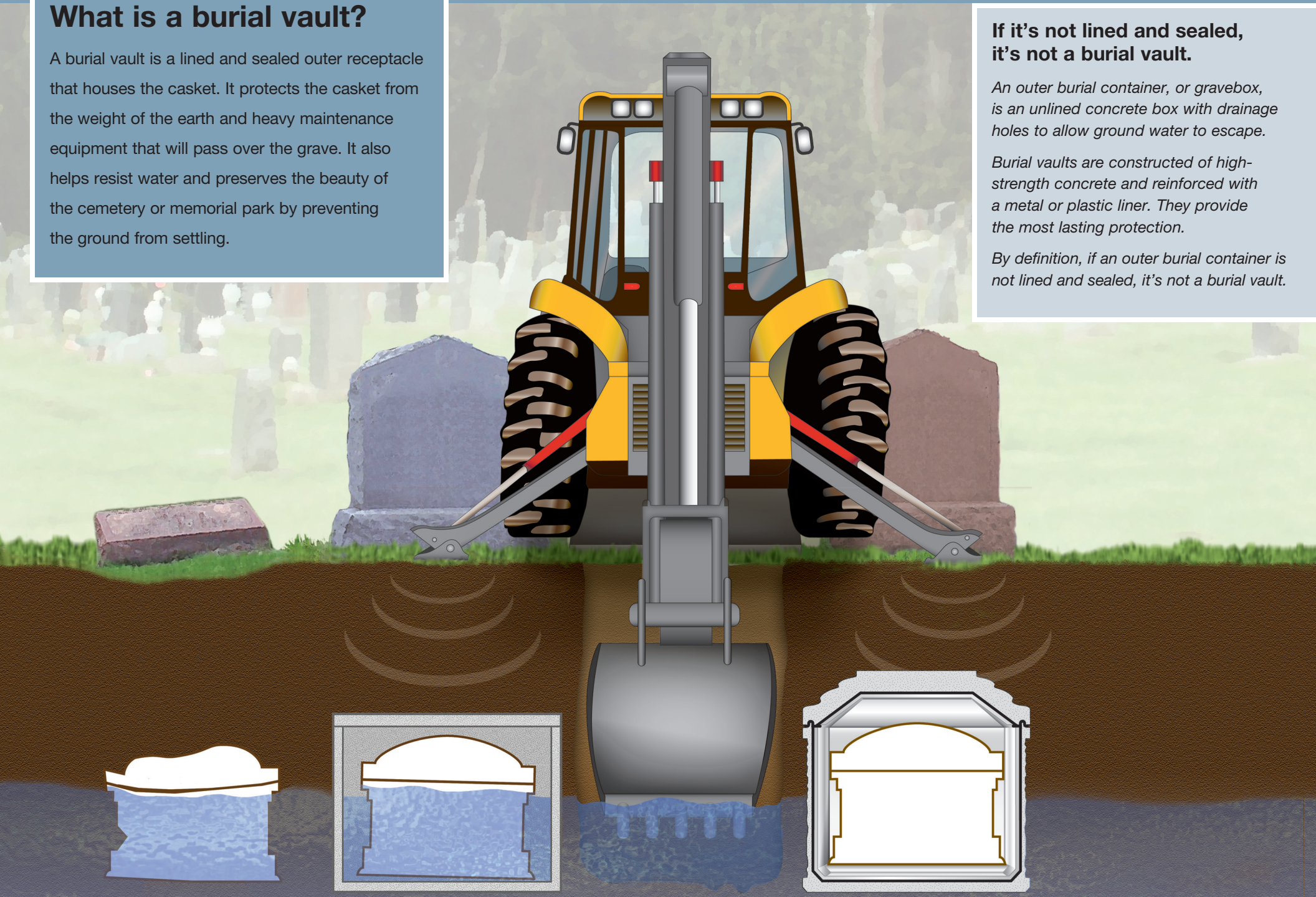

No Outer Burial Container

Unlined Outer Burial Container

Standard Lined and Sealed Burial Vault

What will be at the graveside?

The burial vault is usually set at the graveside for a brief service before interment. After the service, the cover will be placed over the base and sealed, and the grave will be backfilled, compacted, and then seeded or sodded.



Selecting a burial vault

As you select the vault for your loved one, you should consider several factors–the vault's material, design and personalization options. The vault's construction is a major consideration.

Wilbert burial vaults are offered in three levels of protection: Premium, Standard and Basic.

Premium Protection

High-strength concrete, semi-precious corrosion-resistant metals and high-impact plastic combine for excellent durability.

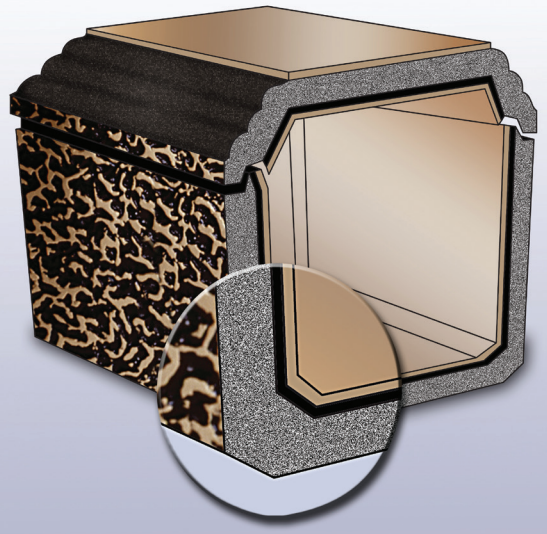

Standard Protection

High-strength concrete, stainless steel and high-impact plastic combine for durable inner protection in a double-reinforced vault.

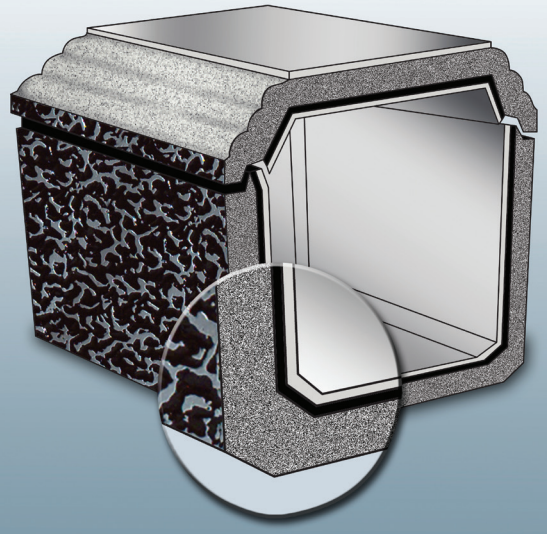

Basic Protection

Single-reinforced vaults feature concrete construction strengthened with plastic for extra support.

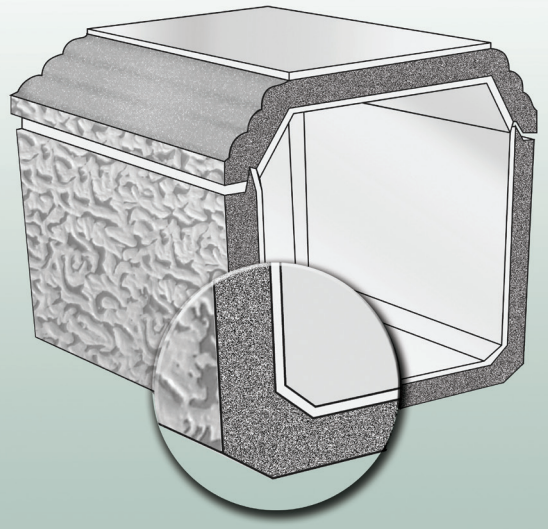

Premium Protection

Wilbert's premium protection vaults are constructed with high-strength concrete and corrosion-resistant bronze or copper.

These premium protection products offer excellent durability. All can be personalized with Wilbert Legacy Custom Series™ prints, Wilbert Legacy Series™ prints, or Life's Reflections® appliqués.

The Wilbert Bronze®

- Ultimate triple-reinforced protection
- Cover and base reinforced with durable bronze alloy
- Exterior base completely encased and interior reinforced with high-impact plastic
- Customized nameplate



Bronze Triune®

- Finest double-reinforced Wilbert burial vault
- Lustrous bronze carapace
- High-strength concrete with bronze and high-impact plastic
- Customized nameplate



Life's Reflections® appliqué shown on carapace, page 18

Copper Triune®

- Double-reinforced burial vault
- Rich copper beauty
- High-strength concrete with copper and high-impact plastic
- Customized nameplate



Sunrise/Sunset Wilbert Legacy Series™ print applied, page 16

Standard Protection

High-strength concrete, stainless steel, and high-impact plastic combine for durable inner protection in our double-reinforced products.

All Triune® series burial vaults can be personalized with Wilbert Legacy Custom Series™ prints, Wilbert Legacy Series™ prints or Life's Reflections® appliqués.

Stainless Steel Triune®

- Brilliant stainless steel carapace
- Cover and base double-reinforced with strong, corrosion-resistant stainless steel and high-impact plastic
- Special emblems and customized nameplate



Wilbert Legacy Custom Series print, Platinum Series image applied, page 17
Speak to your funeral professional regarding availability.

Cameo Rose® Triune®

- Brushed stainless steel carapace
- Cover and base double-reinforced with strong, corrosion-resistant stainless steel and high-impact plastic
- Sculpted pink rose and customized nameplate



White Venetian®

- Finest single-reinforced burial vault
- High-strength concrete with high-impact plastic and a reinforced cover and base
- Rich look of polished marble
- Personalization choices available



Wilbert Legacy Custom™ Series print applied, page 17

Ask your funeral professional about other carapace symbol designs that are available.

Continental®

- Mid-line single-reinforced burial vault
- Durable concrete exterior with a plastic-reinforced cover and base
- Extra-strong cover



Monticello®

- Entry-level single-reinforced burial vault
- Concrete exterior with a plastic-reinforced cover and base

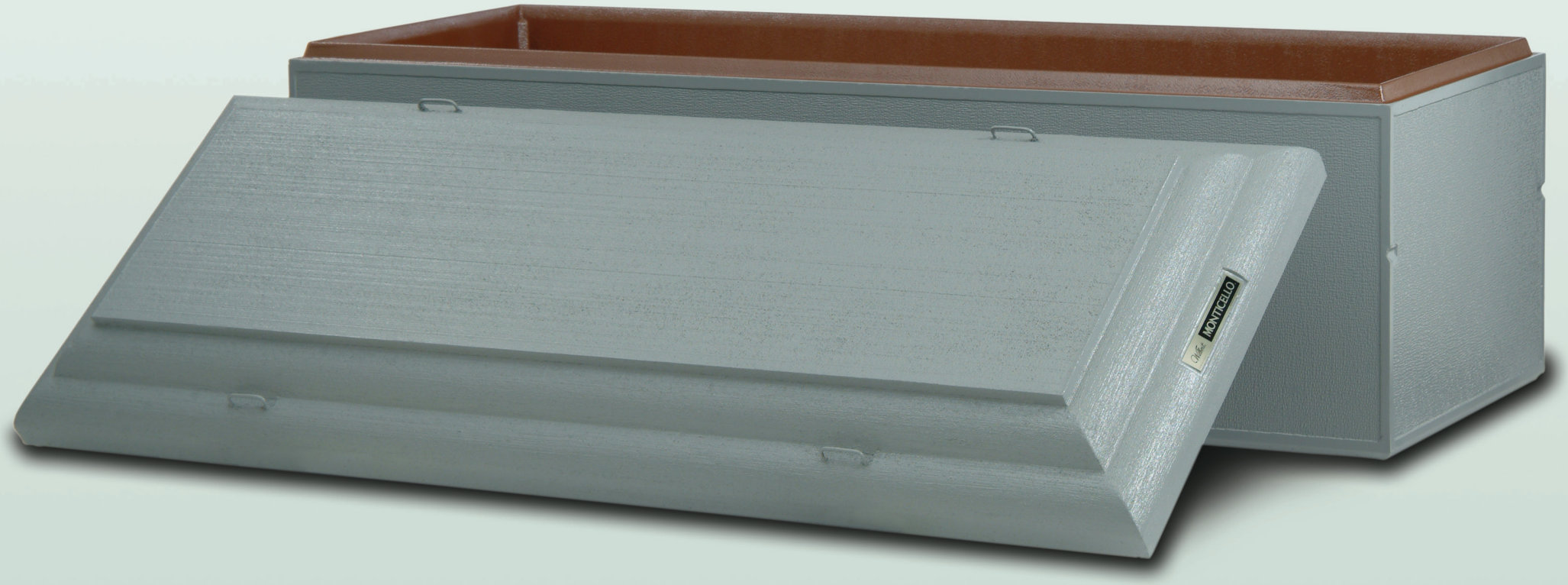

Why choose personalization?

Personalization allows reflection on a detail, idea, or characteristic that captures a cherished memory and celebrates a loved one's spirit.

Wilbert offers many meaningful personalization choices for helping you prepare a fitting tribute to a life that will be remembered.

Wilbert Legacy Series™ Prints

Wilbert Legacy Series prints offer an exclusive method of personalization. Applied to the cover of The Wilbert Bronze®, Triune® series, and Venetian® burial vaults, images create the illusion of being printed directly on the cover. Each scene blends into the metal or plastic with varying effects.

Ask your funeral professional about other selections.



American Flag



Canadian Flag



Sunrise/Sunset



Red Barn



Footprints with poem



Dock

1. Choose image



2. Image applied

Autumn Lake print shown on the Copper Triune® burial vault, page 7

Wilbert Legacy Custom Series™

Wilbert Legacy Custom Series images offer three levels of ultimate customized personalization. Creating a lasting memorial for a loved one is comprised of the following steps:

1. *Family chooses silver, gold or platinum personalization.*



2. *The appropriate number of photographs are provided to the funeral professional from the family.*



3. *Images are scanned and a customized print is created.*



4. *Customized print is applied to the cover of the vault and delivered as arrangements have been made.*





Wilbert Legacy Custom Series print, Platinum Series image shown on a Stainless Steel Triune® burial vault, page 8

Speak to your funeral professional regarding availability.

The Canvas™ Carapace

The Canvas Carapace by Wilbert allows friends and family to leave heartfelt thoughts with a loved one by “signing” the cover of the vault like an autograph book.

Life’s Reflections® appliqués of a school mascot, team jersey number, sport symbol or other interests can be combined to reflect special interests.

The Canvas Carapace is available on several burial vaults. For more information and personalization choices, speak with your funeral professional.





The Canvas™ Carapace and custom Life’s Reflections® appliqués shown on the White Venetian® burial vault, page 12

Speak with your funeral professional regarding availability in your region.